OILWARM
BURNER PRODUCTS

ElectricKit
Classic

Range Cooker Conversions

SFD4

User Instructions

OILWARM BURNER PRODUCTS
VICTOR HOUSE
GREENHAM BUSINESS PARK
WELLINGTON
SOMERSET
TA21 0LR
TEL: 01884 822916 FAX: 01884 829156

ISSUE NO. 2 DATE: 02/01/24

<u>This conversion & connection to electricity supply/supplies must be carried out by a suitably qualified person/persons.</u>

Electrical Ratings 230 Volts 50 Hz 6.6kW This appliance must be earthed!

Turn off power supply/supplies before remove the control cover !

WARNING: The appliance and its accessible parts become hot during use. Care should be taken to avoid touching heating elements.

Children less than 8 years of age shall be kept away unless continuously supervised. The appliance can be used by children aged from 8 years and above and persons with reduced physical, sensory or mental capabilities or lack of experience and knowledge if they have been given supervision or instruction concerning use of the appliance in a safe way and understand the hazards involved. Children shall not play with the appliance. Cleaning and user maintenance shall not be made by children without supervision.

WARNING: Unattended cooking on a hob with fat or oil can be dangerous and may result in fire.

NEVER try to extinguish a fire with water, but switch off the appliance and then cover flame e.g. with a lid or a fire blanket.

WARNING: Danger of fire, do not store items on the cooking surfaces.

During use the appliance becomes hot. Care should be taken to avoid touching heating elements inside the oven.

WARNING: Accessible parts may become hot during use. Young children should be kept away.

A steam cleaner is not to be used for cleaning the cooking range.

Metallic objects such as knives, forks, spoons and lids should not be placed on the hob surface since they can get hot.

If spillage occurs on the hob lid then this should be removed from the lid before opening.

Hobs should be turned down to number 4 setting before closing the lids.

WARNING: Danger of fire, do not leave flammable items on the hob lids.

Control Panel

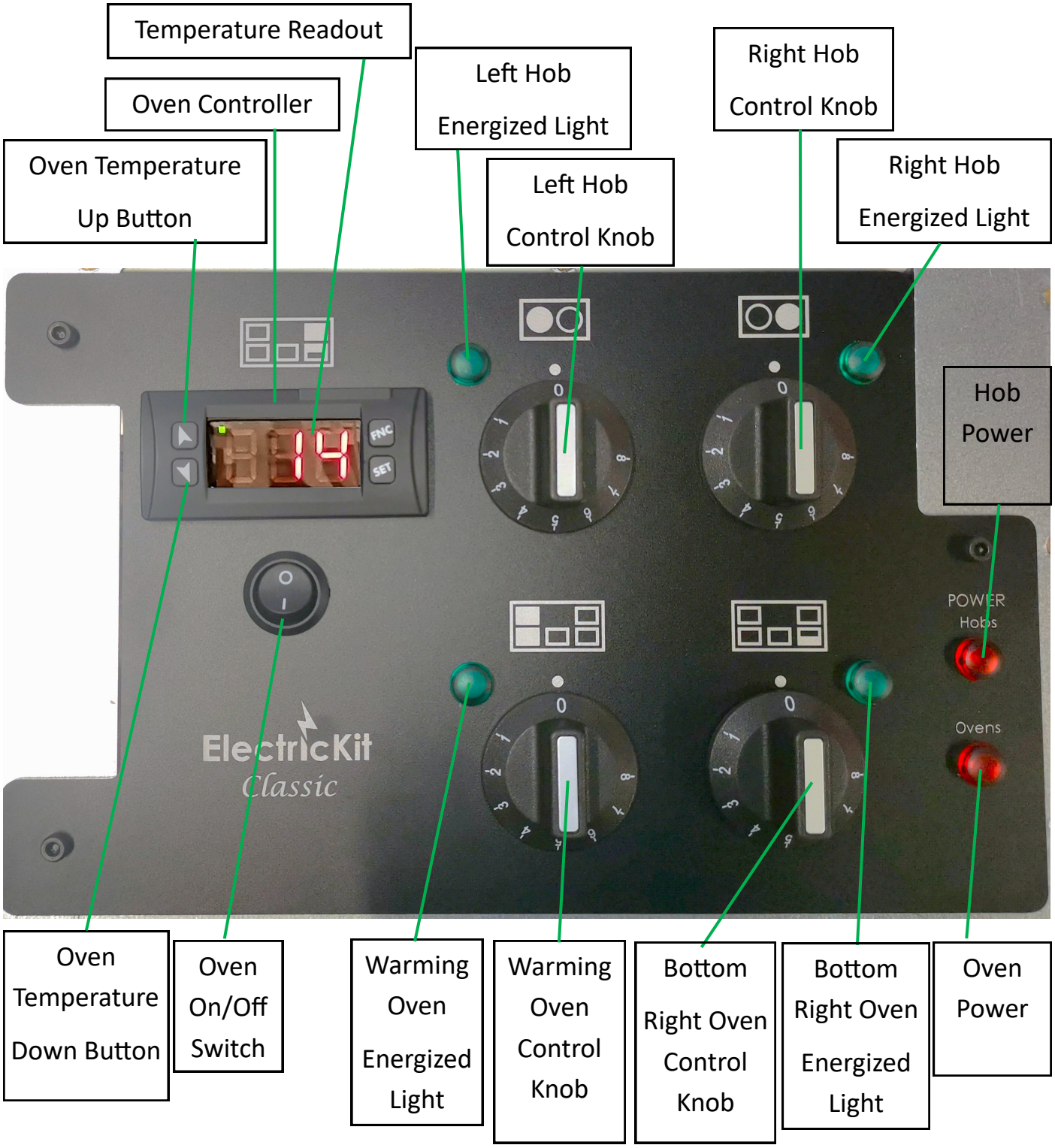

Operating Instruction

Turn the cooker power supply/supplies on at the wall.

Controlling the Top Right Oven

1. Turn the oven on/off switch to the on position, the controller will now turn on.
2. Once the oven controller has run through its start up sequence the oven temperature readout will be displayed. At this point the oven temperature setting can now be adjusted.
3. To adjust the top oven, press the up button to increase the oven temperature or the down button to decrease the oven temperature. Using the up and down buttons, bring the temperature readout to the desired set temperature. The readout will momentarily show the desired temperature and then return to the actual oven temperature, pressing set will save this and return to the current temperature immediately.
4. To turn off the oven switch the oven on/off switch to the off position.
5. Ovens will return to the temperature they were last set, the next time they are turned on.

The control listed above will set the top right oven temperature, the bottom right oven will slowly rise to 65% of the top oven set temperature after approximately 4 hours.

Controlling the Bottom Right Oven

This oven can have its warm up time decreased from the 4 hours stated above using only the top oven controller. The bottom oven control knob can be used to raise the bottom oven temperature closer to the top oven warm up time, it can also be used to increase the temperature above the conventional simmering oven temperature up to 250°C. The list below show the approximations of control knob numbers to oven temperatures. Please bear in mind that the minimum temperature will always need to be above the 65% rule mentioned above.

1—70°C

2—105°C

3—125°C

4— 150°C

5— 175°C

6— 200°C

7— 225°C

8— 250°C

1. The oven is controlled by the oven control knob. To turn the oven on, turn the knob clockwise to the desired setting. Number 1 the minimum setting and 8 the maximum setting. The green light next to the knob will illuminate when the oven element is energized.
2. To turn the oven off turn the knob counter clockwise to the off (0) position.

Controlling the Warming Oven

1. The oven is controlled by the oven control knob. To turn the oven on, turn the knob clockwise to the desired setting. Number 1 the minimum setting and 8 the maximum setting. The green light next to the knob will illuminate when the oven element is energized.
2. To turn the oven off turn the knob counter clockwise to the off (0) position.

The list below show the approximations of control knob numbers to oven temperatures.

1—35°C

2—45°C

3—55°C

4— 65°C

5— 80°C

6— 95°C

7— 110°C

8— 125°C

Controlling the Hobs

The hobs should be set at no greater than the number 4 position when the hob lids are down.

1. The hobs are controlled by the hob control knobs. To turn the hobs on, turn the knobs clockwise to the desired setting. Number 1 the minimum setting and 8 the maximum setting. The green lights next to the knobs will illuminate when the hob elements are energized.
2. To turn the hobs off turn the knobs counter clockwise to the off (0) position.

The list below show the approximations of control knob numbers to hob temperatures.

1—120°C

2—164°C

3—190°C

4— 230°C (Simmer plate temperature)

5— 280°C

6— 325°C (Boiling plate temperature)

7— 350°C

8— 370°C

Optional Induction Hob

This conversion & connection to electricity supply/supplies must be carried out by a suitably qualified person/persons.

- **Electrical Shock Hazard**
  Do not cook on a broken or cracked cooktop. If the cooktop surface should break or crack, switch the appliance off immediately at the mains power supply (wall switch) and contact a qualified technician. Switch the cooktop off at the wall before cleaning or maintenance. Failure to follow this advice may result in electrical shock or death.

- **Fire Hazard**
  Unattended cooking on a hob with fat or oil can be dangerous and may result in fire. NEVER try to extinguish a fire with water, but switch off the appliance and cover flame, e.g. with a fire blanket. Do not store items on cooking surfaces. Failure to follow this advice may result in serious burns or death.

- **Health Hazard**
  This appliance complies with electromagnetic safety standards. However, persons with cardiac pacemakers or other electrical implants (such as insulin pumps) must consult with their doctor or implant manufacturer before using this appliance to make sure that their implants will not be affected by the electromagnetic field. Failure to follow this advice may result in death.

- **Hot Surface Hazard**
  During use, accessible parts of this appliance will become hot enough to cause burns. Do not let body, clothing or any item other than suitable cookware contact with the ceramic glass until the surface is cool. Magnetisable metal objects worn on the body may become hot in the vicinity of the cooktop. Gold or silver jewellery will not be affected. Handles of saucepans may be hot to touch. Check saucepan handles do not overhang other cooking zones that are on. Keep handles out of reach of children. Failure to follow this advice could result in burns and scalds. Never use your appliance as a work or storage surface. Never leave any objects or utensils on the appliance.

- **Do not place or leave any magnetisable objects (eg credit cards, memory cards) or electronic devices (e.g. computers, MP3 players) near the appliance, as they may be affected by its electromagnetic field.**
- **We recommend using plastic or wooden kitchen utensils for cooking with your induction cooktop.**
- **Never use your appliance for warming or heating the room.**

  If spillage occurs on the hob lid then this should be removed from the lid before opening.
- **Induction hob should be turned off before closing the lids.**
- **After use, always turn off the cooking zone and the cooktop by using the touch controls. Do not rely on the pan detection feature to turn off the cooking zones.**
- **Do not allow children to play with the appliance or sit, stand, or climb on it.**

  Children less than 8 years of age shall be kept away unless continuously supervised.

  The appliance can be used by children aged from 8 years and above and persons with reduced physical, sensory or mental capabilities or lack of experience and knowledge if they have been given supervision or instruction concerning use of the appliance in a safe way and understand the hazards involved. Children shall not play with the appliance. Cleaning and user maintenance shall not be made by children without supervision.
- **Do not store items of interest to children in cabinets above the appliance. Children climbing on the cooktop could be seriously injured.**
- **Do not repair or replace any part of the appliance all servicing should be done by a qualified technician.**
- **Do not use a steam cleaner to clean your cooktop.**
- **Do not place or drop heavy objects on your cooktop.**
- **Do not stand on your cooktop.**

- **Do not use pans with jagged edges or drag pans across the ceramic glass surface as this can scratch the glass.**
- **Do not use scourer or any other harsh/abrasive cleaning agents to clean your cooktop, as these can scratch the ceramic glass.**
- **If the power supply cable is damaged, it must only be replaced by a qualified technician.**
- **This appliance must be earthed!**
- **Do not operate your cooktop by means of an external timer or separate remote control system.**

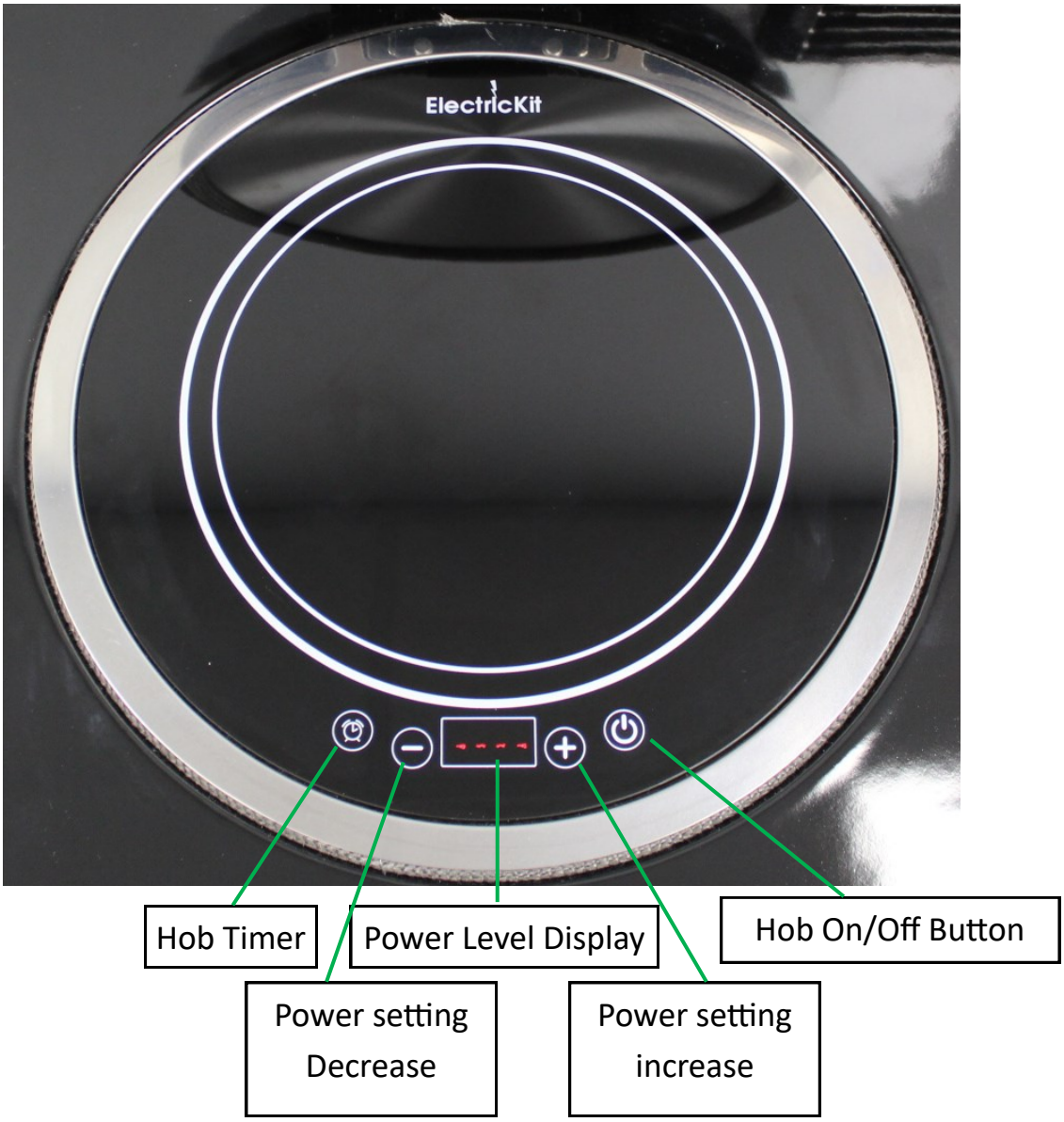

1. Place a pan on the hob and press and hold the power button until a beep is heard this will turn on the hob and heat at full power. If no pan is detected E-0 is displayed on the screen.
2. The plus and minus buttons can be used to adjust the current power level, P-1 to P-5 for 1600w version and P-1 to P-8 for 3000w version.
3. Pressing the hob timer button will change the display to show 00:00. The plus and minus buttons can then be used to increase or decrease the cook timer, this is in 1 minute increments. After a few seconds the timer will automatically start to count down, this can be left on the display or pressing the timer button again reverts back to the current power level and allows changes to be made to power setting. Pressing the hob timer again will change back to displaying the remaining time. When the cook timer reaches 0 a buzzer will beep and the hob will automatically turn off. The cooling fans will run for a short period after switching off then automatically turn off.

The induction hob must be turned off before the dome can be closed.